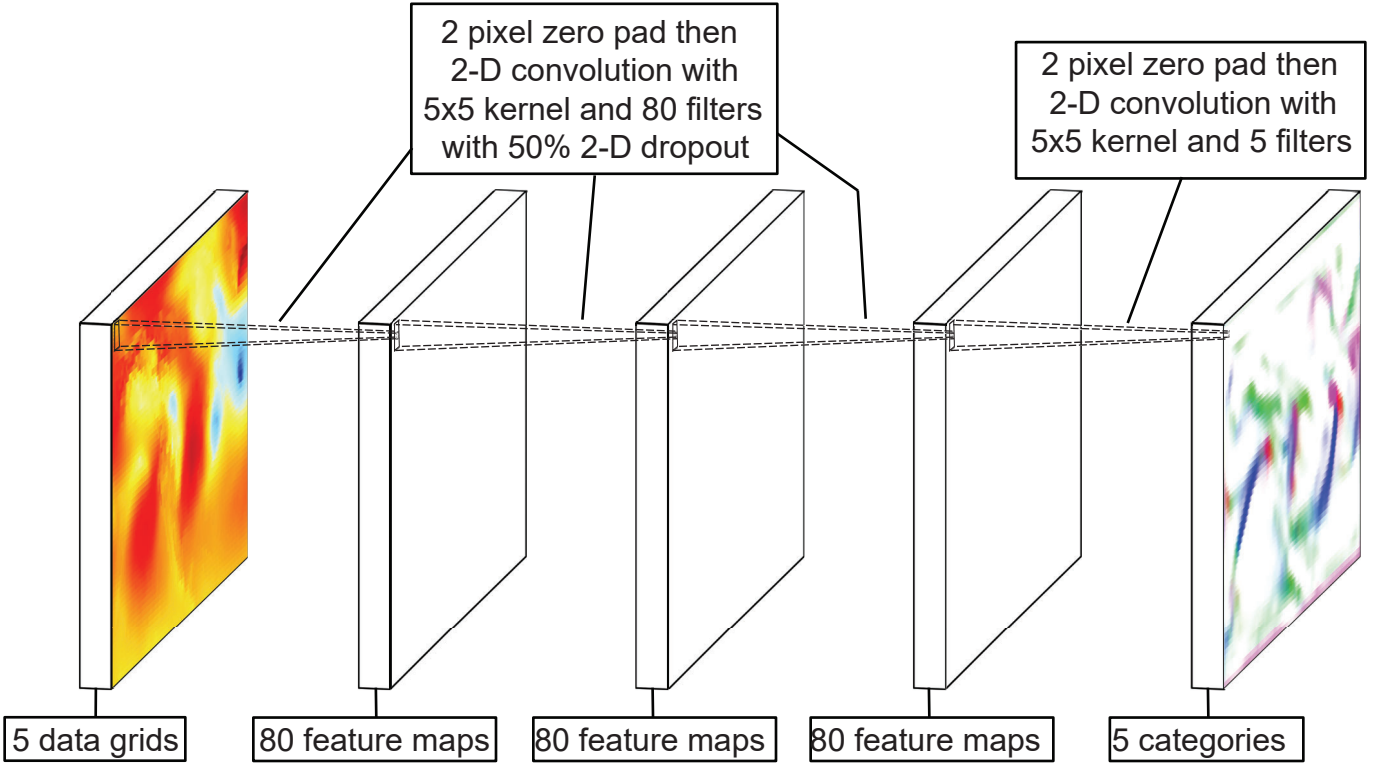
2 pixel zero pad then
2-D convolution with
5x5 kernel and 80 filters
with 50% 2-D dropout
2 pixel zero pad then
2-D convolution with
5x5 kernel and 5 filters
5 data grids
80 feature maps
80 feature maps
80 feature maps
5 categories